Annex B to Technical Requirements

A) GENERAL NOTES

WORKS TO BE PROVIDED AND INSTALLED BY CONTRACTORS

1. THE CONTRACTORS SHALL BE RESPONSIBLE TO SUPPLY, DESIGN, DELIVERY, INSTALLATION, TESTING AND COMMISSIONING OF THE FORWARD PROCURED EQUIPMENT (FPE) AS SHOWN ON COMPOSITE DRAWINGS.
2. THE CONTRACTORS SHALL CO-ORDINATE ON SITE WITH ALL RELEVANT PARTIES, IN PARTICULAR THE DESIGN AND BUILD CONTRACTOR, FOR THE INSTALLATION.
3. THE CONTRACTORS SHALL SUBMIT ALL FPE INSTALLATION DETAILS TO DESIGN AND BUILD CONTRACTOR FOR CO-ORDINATION AT LEAST 7 DAYS PRIOR TO INSTALLATION.
4. ALL DIMENSIONS SHOWN ON DRAWINGS ARE FOR REFERENCE ONLY. THE CONTRACTORS SHALL BE RESPONSIBLE FOR THE SITE MEASUREMENT TO VERIFY ALL CRITICAL DIMENSIONS BEFORE INSTALLATION AND DELIVERY OF EQUIPMENT.
5. ALL FINAL CONNECTION FROM INTERFACING AND CAPPED OFF POINTS (E.G. ISOLATOR, VALVE, ETC.) TO FPE EQUIPMENT SHALL BE PROVIDED AND INSTALLED BY CONTRACTORS.
6. ALL SERVICES IN DARK SOLID LINE AS SHOWN IN THE DRAWINGS SHALL BE PROVIDED AND INSTALLED BY THE CONTRACTORS UNLESS OTHERWISE SPECIFIED.
7. SETTING OUT OF B.S. PROVISIONS AND BUILDER'S WORKS FOR EQUIPMENT IS FOR INDICATION ONLY. EXACT LOCATION SHALL BE COORDINATED WITH THE DESIGN AND BUILD CONTRACTOR & VERIFIED ON SITE PRIOR TO INSTALLATION.
8. THE CONTRACTORS SHALL BE RESPONSIBLE TO SEAL UP ALL AROUND OF THE EQUIPMENT FOR AIR TIGHTNESS INCLUDING AIR TIGHT CEILING OPENING, CEILING JULCTION, HANGER WALL, SUNKEN SLAB, INTERFACE BETWEEN FLOOR FINISH AND EQUIPMENT, ETC. IF APPLICABLE.
9. THE CONTRACTORS SHALL BE RESPONSIBLE TO SUPPLY AND INSTALL ALL REQUIRED MATERIAL, FITTING, CABLES, PIPEWORKS, DUCTWORKS, ETC. FOR CONNECTING THE EQUIPMENT TO THE CORRESPONDING BUILDING SERVICES PROVISION BY DESIGN AND BUILD CONTRACTOR AND DESIGN AND BUILD CONTRACTOR'S SUBCONTRACTORS AS SHOWN ON THE COMPOSITE DRAWINGS. ANY REVISION OR ADDITIONAL WORKS ON THE BUILDING SERVICES PROVISIONS, INCLUDING BUT NOT LIMITED TO FIRE SERVICE, LIGHTING, AIR-CONDITIONING & MECHANICAL VENTILATION, DRAINAGE, WATER SUPPLY POINT, MEDICAL GAS OUTLET, ETC., SHALL BE RESPONSIBLE BY CONTRACTORS TO ENSURE THE DESIGN PERFORMANCE WOULD BE NOT AFFECTED AND DEGRADED AFTER INSTALLATION OF EQUIPMENT.
10. THE CONTRACTORS SHALL ENSURE THAT THEIR EQUIPMENT CAN BE DELIVERED TO SITE UPON COORDINATION AND AGREEMENT WITH DESIGN AND BUILD CONTRACTOR ON THE DELIVERY ROUTE AND WORKING SCHEDULE. ALL COSTS FOR ADDITIONAL OR MODIFICATION WORKS RELATED TO BUILDER WORKS SHALL BE BORNE BY THE CONTRACTORS.
11. ALL EQUIPMENT WALL AND FALSE CEILING PANEL CUT OFF, PIPE SLEEVE,SEALING AND MAKE GOOD WORKS SHALL BE DESIGNED, PROVIDED & INSTALLED BY THE CONTRACTORS.
12. SUPPORTING FRAME FOR FPE EQUIPMENT SHALL BE DESIGNED, PROVIDED & INSTALLED BY THE CONTRACTORS, UNLESS OTHERWISE SPECIFIED.
13. THE CONTRACTORS SHALL BE RESPONSIBLE FOR COVER UP ALL CABLE CONTAINMENT (TRUNKING & JULCTION).
14. THE CONTRACTORS SHALL BE RESPONSIBLE TO DESIGN THE PROVISION FOR MAINTENANCE (E.G. MOUNTING HOOD,ACCESS PANEL, ACCESS DOOR, ETC).
15. ALL FINAL CONNECTION FROM ISOLATION / GATE VALES AND CAPPED-OFF POINTS TO FPE EQUIPMENT WOULD BE PROVIDED AND INSTALLED BY THE CONTRACTORS.
16. THE CONTRACTORS SHALL BE RESPONSIBLE TO ENSURE THEIR INSTALLATION TO COMPLY WITH ALL RELEVANT REGULATION, GUIDELINE, STANDARD, ETC.
17. ALL TEMPORARY WORKING PLATFORM SUCH AS SCAFFOLDING AND MOBILE PLATFORM, ETC. FOR EQUIPMENT INSTALLATION SHALL BE PROVIDED BY THE CONTRACTORS. SAFE WORKING PLATFORM TO THE SATISFACTION OF THE DESIGN AND BUILD CONTRACTOR TO BE PROVIDED BY THE CONTRACTORS.
18. EQUIPOTENTIAL BONDING FOR MEDICAL EQUIPMENT SHOULD BE FINISHED BY THE CONTRACTORS.
19. IF ANY WATER CONNECTION FROM BUILDING CENTRAL WATER SUPPLY SYSTEM, THE CONTRACTORS SHALL EMPLOY LICENSED PLUMBER TO CARRY OUT ALL SUBMISSION (E.G WWO 542 AND WWO46,ETC) AND INSTALLATION / WORKS TO FULFILL WSD REQUIREMENTS.
20. THE CONTRACTORS SHALL BE RESPONSIBLE FOR ALL STATUTORY SUBMISSIONS FOR ANY REVISION OR ADDITIONAL WORKS ON SITE TO SUIT THE INSTALLATION AND DAILY OPERATION OF THE EQUIPMENT IF REQUIRED.
21. THE CONTRACTOR SHALL BE RESPONSIBLE FOR SEALING UP THE RESERVED WALL OPENING AND PROVIDING AND INSTALLING THE APPROPRIATE FIRE BARRIERS, FIRE-STOP SEALANTS, FIRE-STOP BLOCKS, ETC. AS NECESSARY TO MAINTAIN THE FIRE RESISTANCE RATING, WHERE APPLICABLE.
22. THE CONTRACTORS SHALL BE RESPONSIBLE TO RE-PROVIDE, REINSTATE AND MAKE GOOD OF THE FIRE BARRIERS, FIRE-STOP SEALANTS, FIRE-STOP BLOCKS, ETC. FOR FIRE COMPARTMENTATION, FIRE RATED ENCLOSURE, CABLE TRAYS, PIPES AND OTHER PENETRATIONS REQUIRED FOR EQUIPMENT INSTALLATION TO MAINTAIN THE FIRE RESISTANCE RATING, WHERE APPLICABLE.
23. THE DETAIL OF WORKS DEMARCATION BETWEEN THE CONTRACTOR AND THE DESIGN AND BUILD CONTRACTOR SHALL BE REFERRED TO THE LAYOUT AND ELEVATION DRAWINGS.

B) LEGEND

ELECTRICAL INSTALLATION

- ONE GANG/ TWO GANG SWITCHED 13A SOCKET OUTLET WITH PILOT LIGHT (NORMAL POWER) (MOUNTING LEVEL ABOVE BENCH AT 1150mmAFFL, UNLESS OTHERWISE SPECIFIED)
- ONE GANG/ TWO GANG SWITCHED 13A SOCKET OUTLET WITH PILOT LIGHT (ESSENTIAL POWER) (MOUNTING LEVEL ABOVE BENCH AT 1150mmAFFL, UNLESS OTHERWISE SPECIFIED)
- ONE GANG/ TWO GANG SWITCHED 13A WEATHERPROOF SOCKET OUTLET, IP56 (NORMAL POWER) (MOUNTING LEVEL ABOVE BENCH AT 1150mmAFFL, UNLESS OTHERWISE SPECIFIED)
- ONE GANG/ TWO GANG SWITCHED 13A WEATHERPROOF SOCKET OUTLET, IP56 (ESSENTIAL POWER) (MOUNTING LEVEL ABOVE BENCH AT 1150mmAFFL, UNLESS OTHERWISE SPECIFIED)
- ISOLATOR (RATING AS INDICATED), TPN UNLESS OTHERWISE SPECIFIED (NORMAL POWER) (MOUNTING LEVEL AT 300mm AFCL, UNLESS OTHERWISE SPECIFIED)
- ISOLATOR (RATING AS INDICATED), TPN UNLESS OTHERWISE SPECIFIED (ESSENTIAL POWER) (MOUNTING LEVEL AT 300mm AFCL, UNLESS OTHERWISE SPECIFIED)
- DP SWITCHED 13A FUSED SPUR UNIT WITH PILOT LIGHT (MOUNTING LEVEL AT 300mm AFCL,UNLESS OTHERWISE SPECIFIED)
  "XX" DENOTED THE POWER SUPPLY, E FOR ESSENTIAL, U FOR UPS, INTEGRATED WITH PILOT LIGHT FOR SOCKET AND FUSE SPUR UNIT

EXTRA LOW VOLTAGE INSTALLATION

- IEC60670-1 BASE BOX W/ BLANK PLATE COVER C/W 1 NO. ø25mm G.I. CONDUIT BY DESIGN AND BUILD CONTRACTOR, DATA PORT W/ COVER PLATE C/W DATA CABLE BY OTHERS (I.E. IT VENDOR, OTHER SYSTEM VENDOR)
  D1: CMH IT SYSTEMS
  D2: F&E SYSTEMS
  D3: BUILDING & OTHER RELATED SYSTEMS

PLUMBING & DRAINAGE INSTALLATION

- W.P. COLD WATER POINT (SIZE AS INDICATED ON DRAWING)
- H.W.P. HOT WATER POINT (SIZE AS INDICATED ON DRAWING)

MEDICAL GAS INSTALLATION

- NMA7 NON-MEDICAL COMPRESSED AIR PIPE (7 BAR) C/W BALL VALVE

ACMV INSTALLATION

- CH.W.S CHILLED WATER SUPPLY POINT
- CH.W.R CHILLED WATER RETURN POINT
- LOCAL EXHAUST AIR DUCT

STEAM INSTALLATION

- STEAM.S STEAM SUPPLY POINT
- STEAM.R STEAM CONDENSATE RETURN POINT

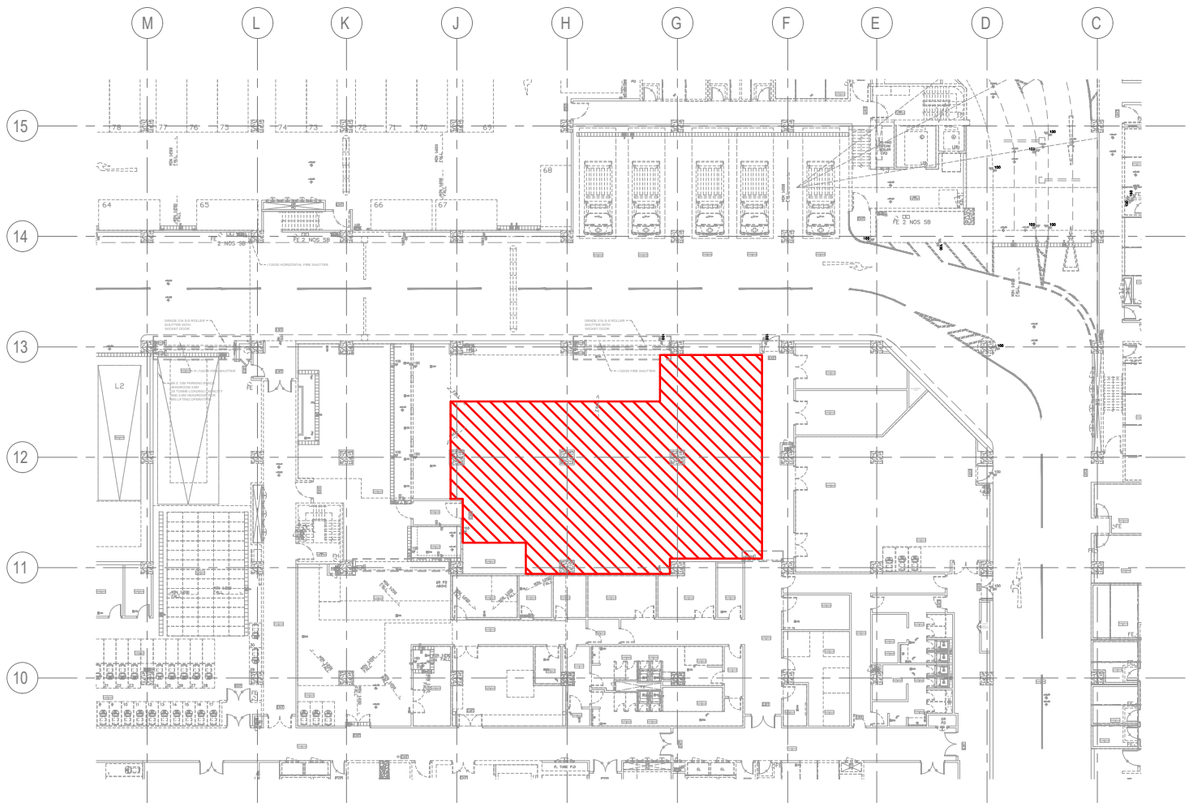

E10.7&8 FINISHING SECTION AT LG/F
SCALE 1 : 500

C) ROOM CONDITIONS

ROOM NAME: FINISHING SECTION (E10.7&8)

a) TEMPERATURE IN SUMMER & WINTER : NIL
b) HUMIDITY IN SUMMER & WINTER : NIL
c) FALSE CEILING LEVEL : 4000mm AFFL
d) ILLUMINATION LEVEL : 300 LUX
e) CEILING FINISH : ALUMINUM TILE SUSPENDED CEILING
f) WALL FINISH : CERAMIC TILES
g) FLOOR FINISH : EPOXY FLOORING
h) SKIRTING FINISH : POLISHED COVED HOMOGENOUS TILES
i) FLOOR SLAB IMPOSED LOAD : 7.5kPa

For Reference Only

C) EQUIPMENT SCHEDULE AND DESIGN AND BUILD CONTRACTOR'S PROVISIONS

FPE ITEM NO	DESCRIPTION (QUANTITY)	DESIGN AND BUILD CONTRACTOR'S PROVISIONS	FLOOR / AREA (SOA REF.)
FPE-E10-07	FLATWORK IRONING SYSTEM (QTY: 1 NO.)	1. POWER : 1 x 100A TPN ISOLATOR (ESSENTIAL) 2. NON-MEDICAL COMPRESSED AIR (7 BAR) : 2 x ø15mm PIPE C/W CONTROL VALVE (800l/hr) 3. LOCAL EXHAUST : 1 x 250mmx250mm EXHAUST AIR DUCT W/ NON-RETURN DAMPER & CAP-OFF (WITH FLOW RATE >/=2520m^3/h) 4. STEAM SUPPLY : 1 x ø50mm C/W CONTROL VALVE (8-10 BAR & 420kg/hr) 5. STEAM CONDENSATE RETURN : 1 x ø50mm PIPE C/W CONTROL VALVE	LGF FINISHING SECTION (E10.8)
FPE-E10-08	TUNNEL FINISHING SYSTEM (QTY: 1 NO.)	FOR TUNNEL FINISHER: 1. POWER : 1 x 63A TPN ISOLATOR (ESSENTIAL) 2. NON-MEDICAL COMPRESSED AIR (7 BAR) : 1 x ø15mm PIPE C/W CONTROL VALVE (90l/hr) 3. STEAM SUPPLY: 1 x ø40mm C/W CONTROL VALVE (8-10 BAR & 380kg/hr) 4. STEAM CONDENSATE RETURN : 1 x ø25mm PIPE C/W CONTROL VALVE 5. LOCAL EXHAUST : 1 x 250mmx250mm EXHAUST AIR DUCT W/ NON-RETURN DAMPER & CAP-OFF (WITH FLOW RATE >/=2600m^3/h) FOR GARMENT FOLDER: 1. POWER : 1 x 32A TPN ISOLATOR (ESSENTIAL) 2. NON-MEDICAL COMPRESSED AIR (7 BAR) : 1 x ø15mm PIPE C/W CONTROL VALVE FOR MONORAIL AND MANUAL FEED: 1. POWER : 1 x 32A TPN ISOLATOR (ESSENTIAL)	LGF FINISHING SECTION (E10.8)

E) DRAWING LIST

DRAWING NO.	REVISION	DRAWING TITLE
BS/8515/A/COM/E10-07&08/001	3	COMPOSITE DRAWING OF FLATWORK IRONING & TUNNEL FINISHING SYSTEM GENERAL NOTES, LEGEND AND KEY PLAN
BS/8515/A/COM/E10-07&08/002	7	COMPOSITE DRAWING OF FLATWORK IRONING & TUNNEL FINISHING SYSTEM DEMARCATION DIAGRAM, EQUIPMENT SCHEDULE, DESIGN AND BUILD CONTRACTOR'S PROVISION AND DRAWING LIST
BS/8515/A/COM/E10-07&08/201	5	COMPOSITE DRAWING OF FLATWORK IRONING & TUNNEL FINISHING SYSTEM LAYOUT PLAN
BS/8515/A/COM/E10-07&08/901	6	COMPOSITE DRAWING OF FLATWORK IRONING & TUNNEL FINISHING SYSTEM ELEVATION A
BS/8515/A/COM/E10-07&08/902	6	COMPOSITE DRAWING OF FLATWORK IRONING & TUNNEL FINISHING SYSTEM ELEVATION B
BS/8515/A/COM/E10-07&08/903	5	COMPOSITE DRAWING OF FLATWORK IRONING & TUNNEL FINISHING SYSTEM ELEVATION C

D) DEMARCATION DIAGRAM:

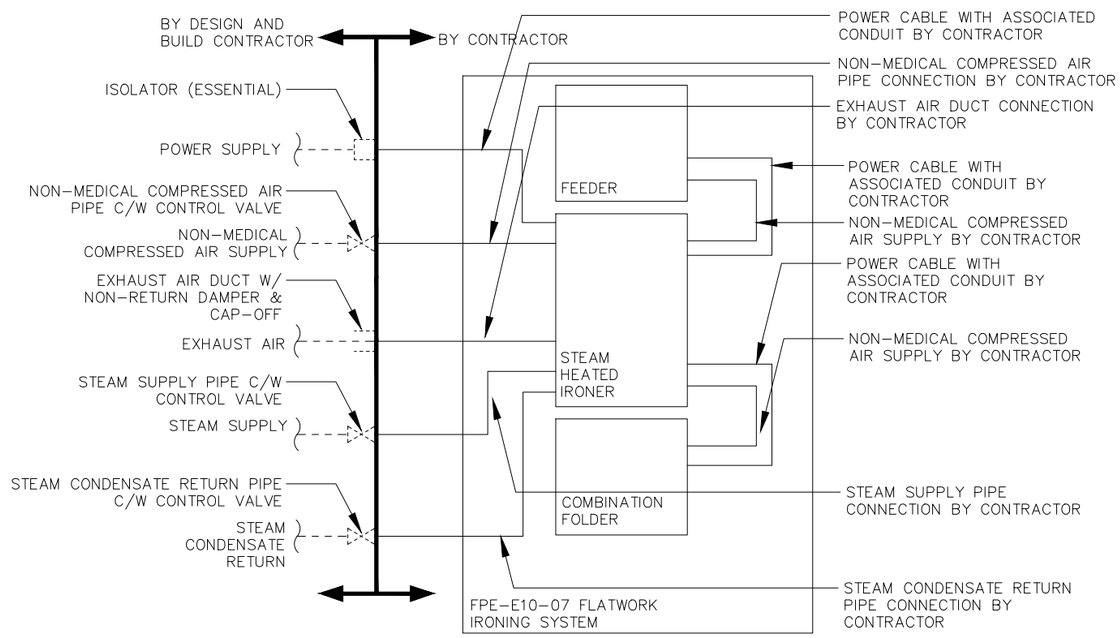

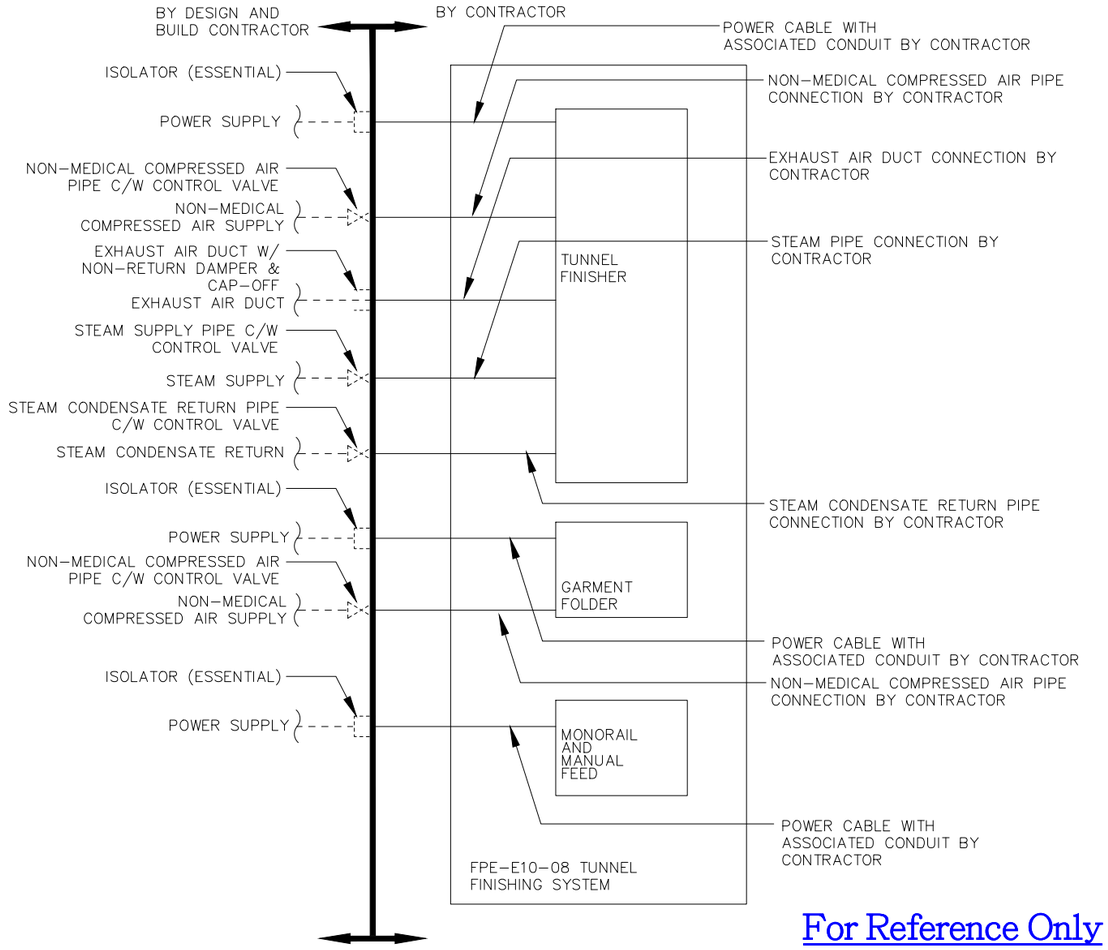

For Reference Only

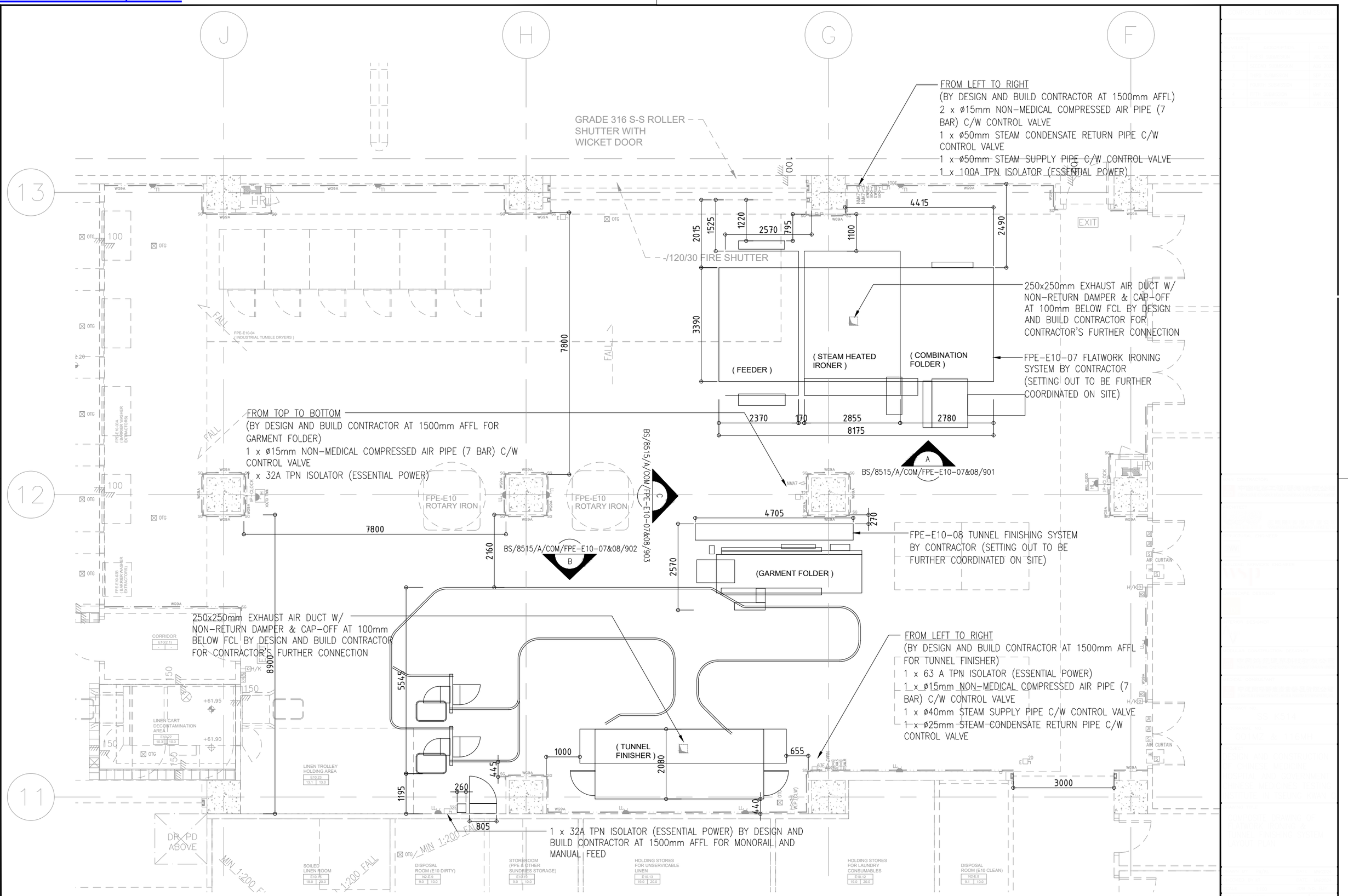

LGF FINISHING SECTION E10.8

For Reference Only

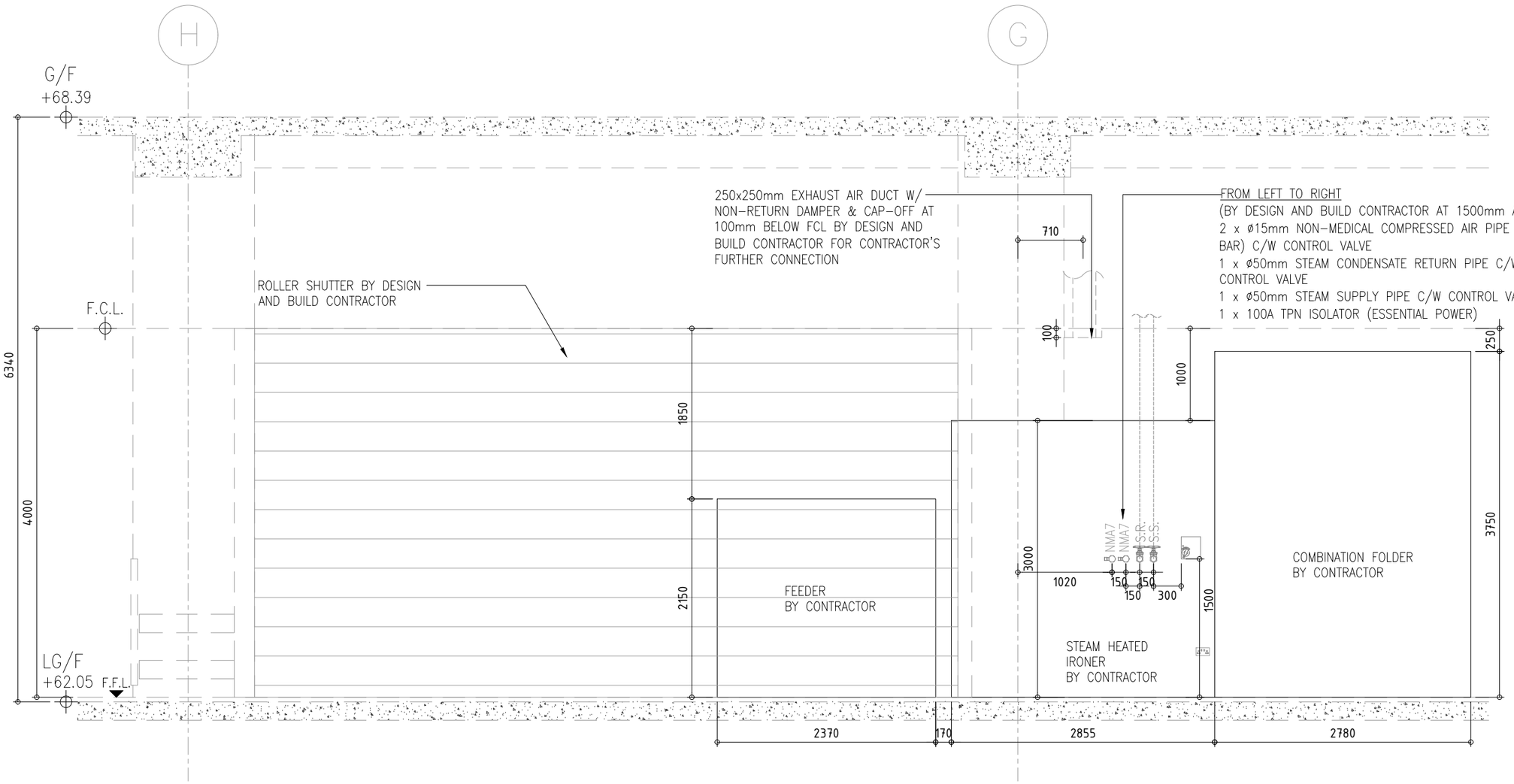

E10.7&8 FINISHING SECTION - ELEVATION A

For Reference Only

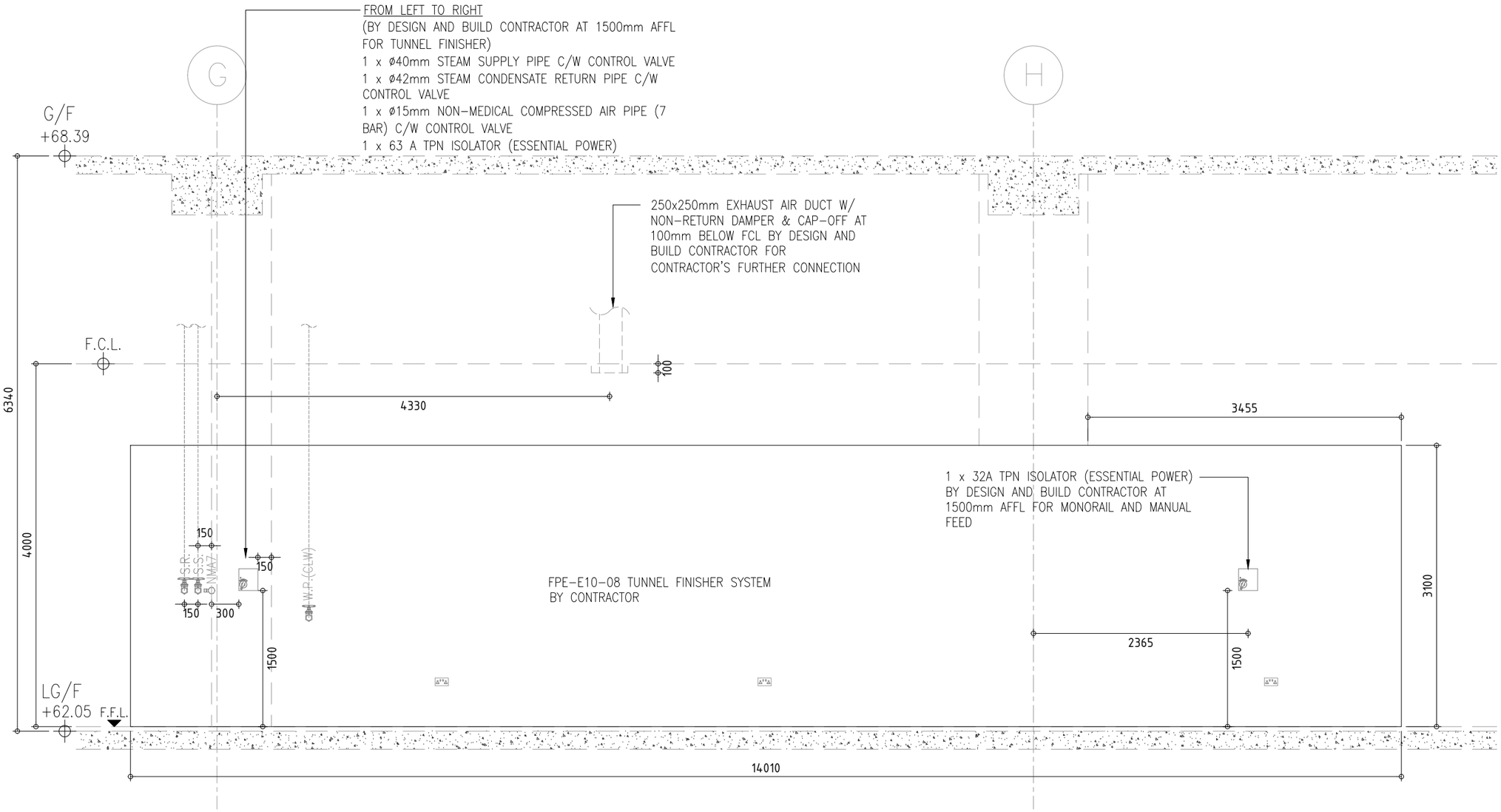

E10.7&8 FINISHING SECTION - ELEVATION B

For Reference Only

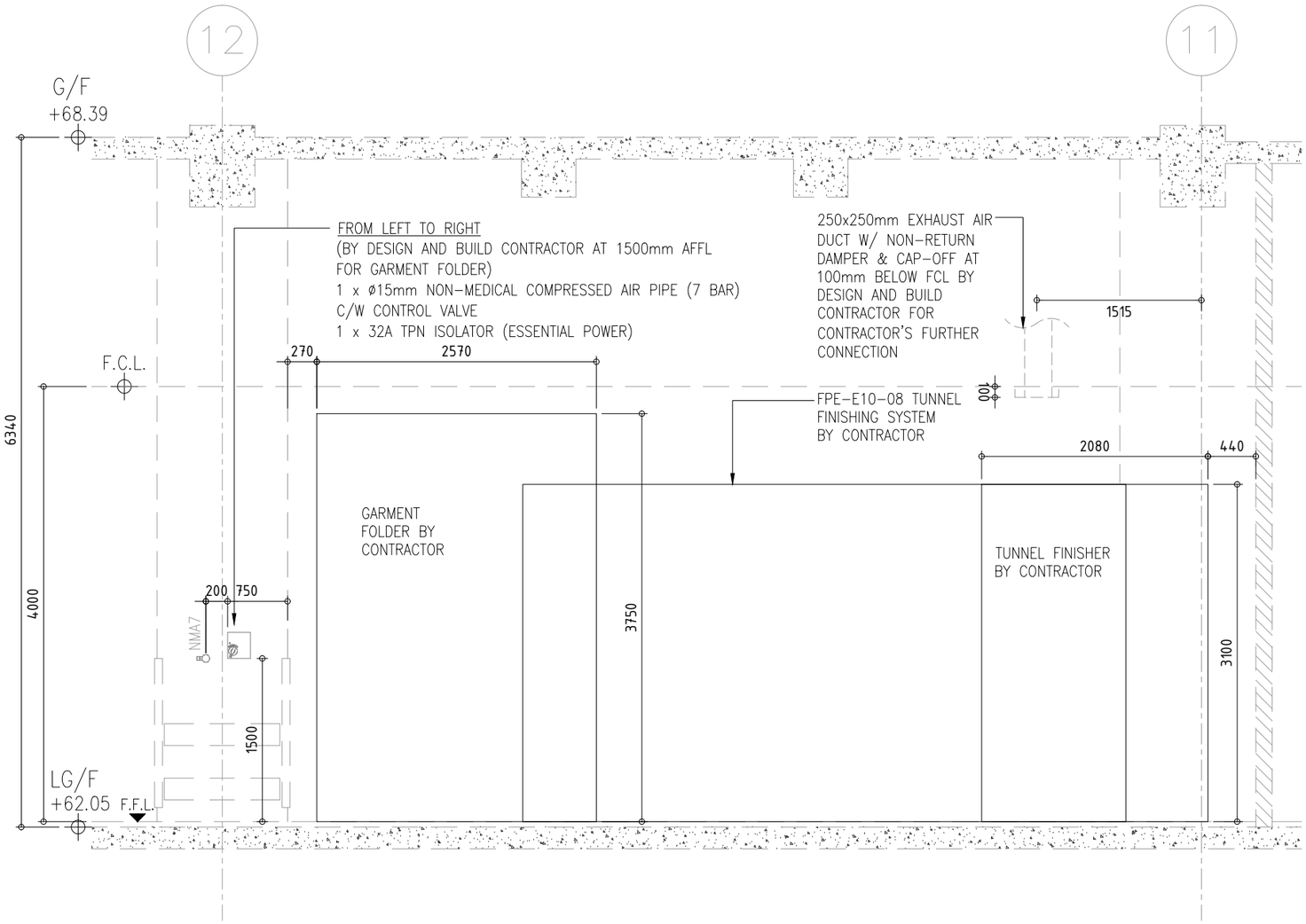

E10.7&8 FINISHING SECTION - ELEVATION C